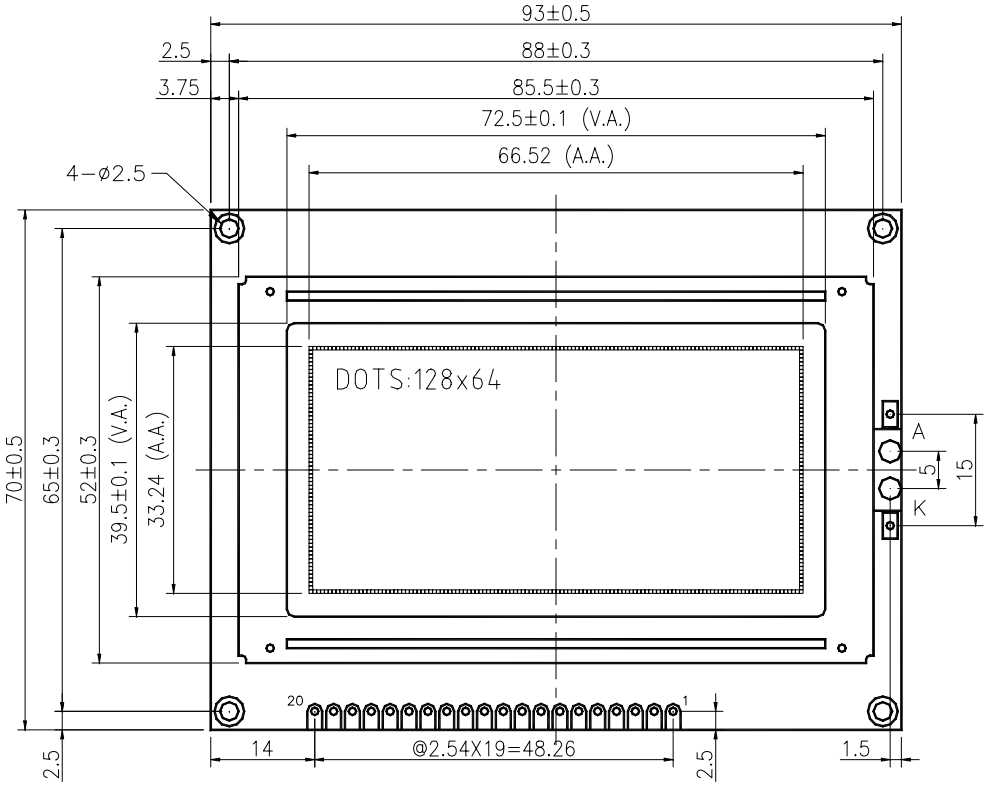
93±0.5
2.5
88±0.3
3.75
85.5±0.3
72.5±0.1 (V.A.)
66.52 (A.A.)
4-ø2.5
DOTS:128x64
70±0.5
65±0.3
52±0.3
39.5±0.1 (V.A.)
33.24 (A.A.)
A
5
15
K
20
1
14
@2.54X19=48.26
2.5
1.5
2.5

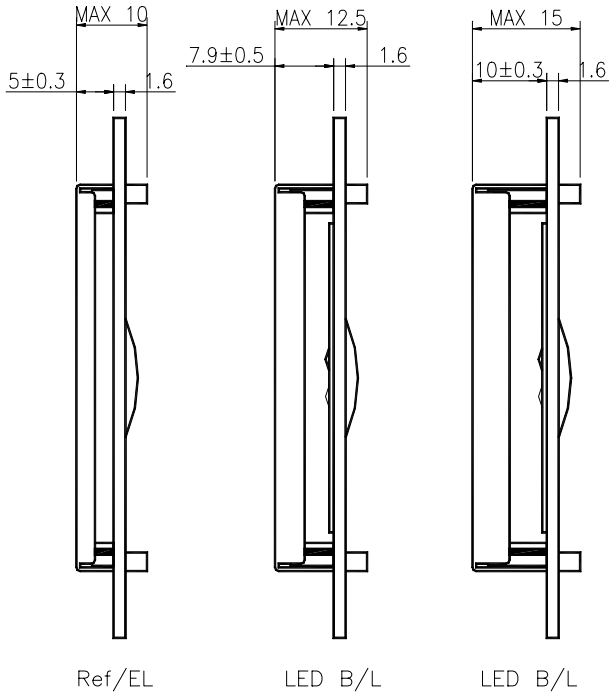
MAX 10
5±0.3
1.6
Ref/EL
MAX 12.5
7.9±0.5
1.6
LED B/L
MAX 15
10±0.3
1.6
LED B/L

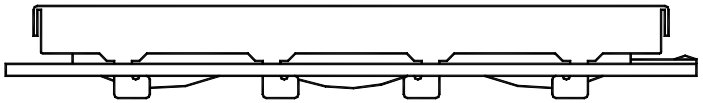

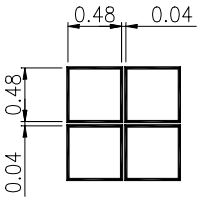
0.48
0.04
0.48
0.04